B2Bpartner
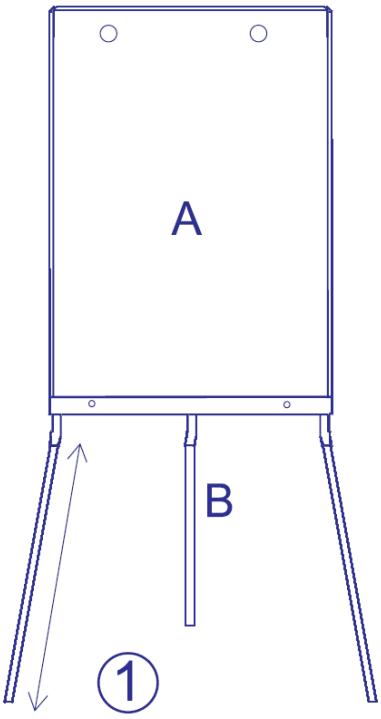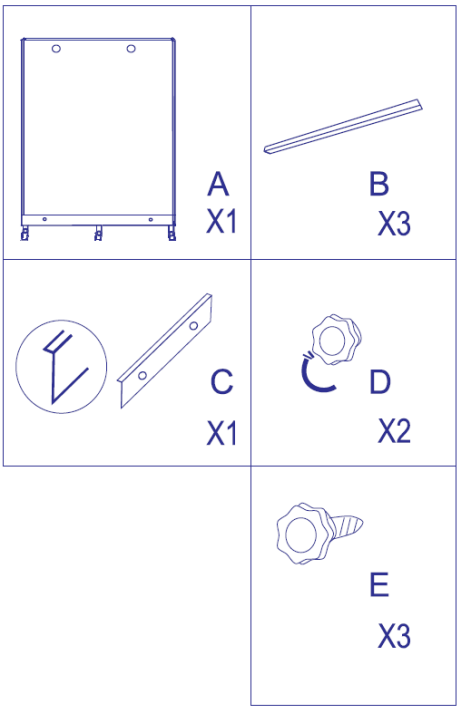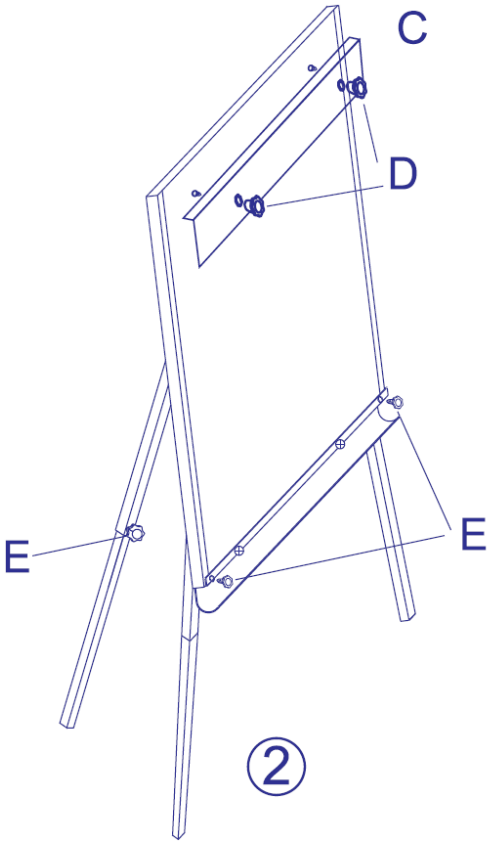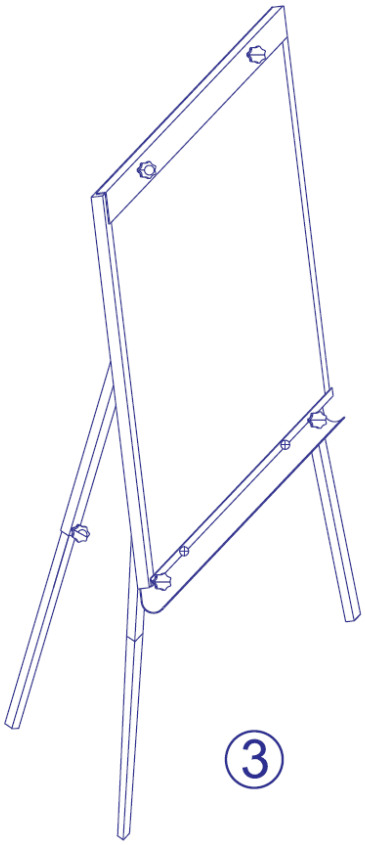
420043