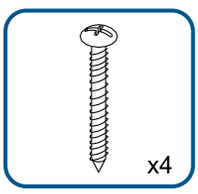
x4

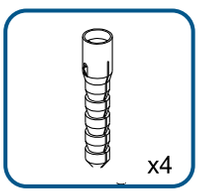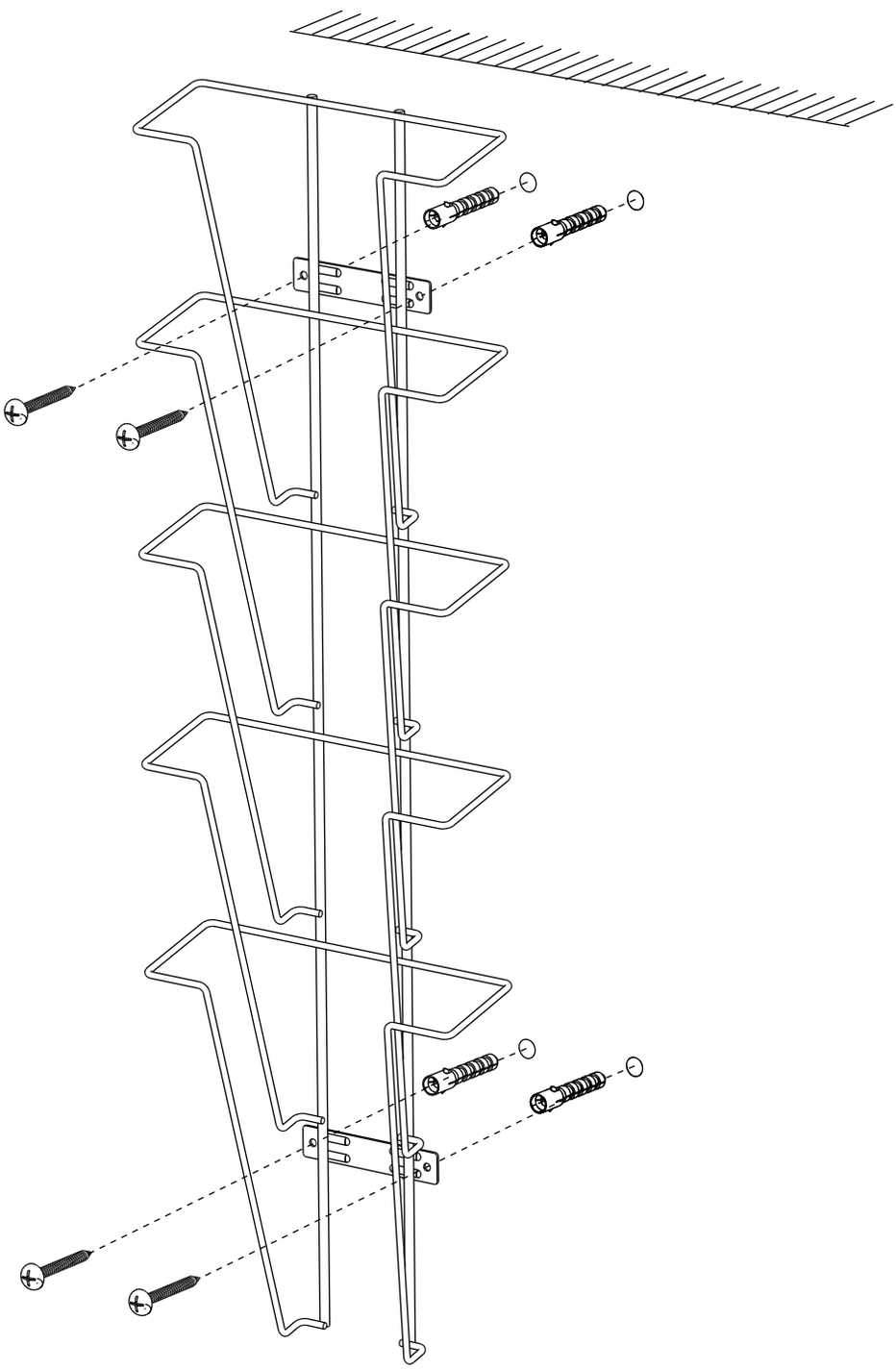
x4