B2Bpartner

6100229

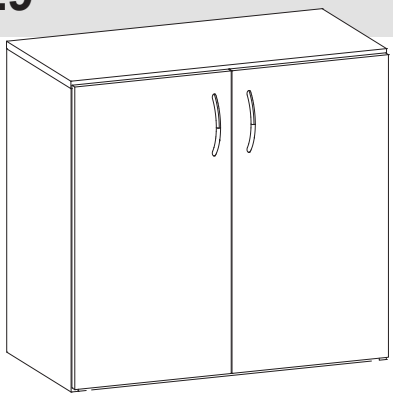

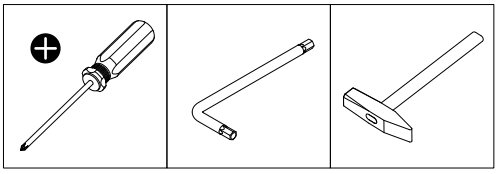

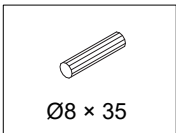 Ø8 × 35	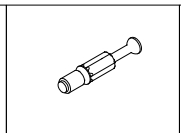		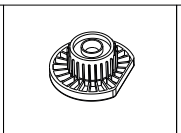	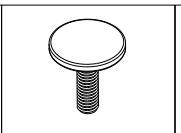	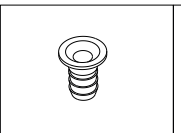	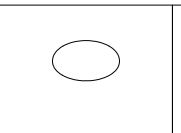	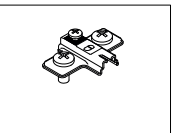
A 18×	B 12×	C 12×	D 1×	E 4×	F 4×	G 12×	H 4×

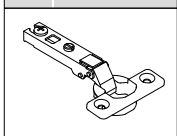	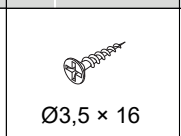 Ø3,5 × 16	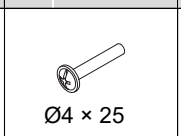 Ø4 × 25	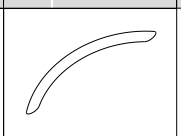
J 4×	K 8×	L 4×	M 2×

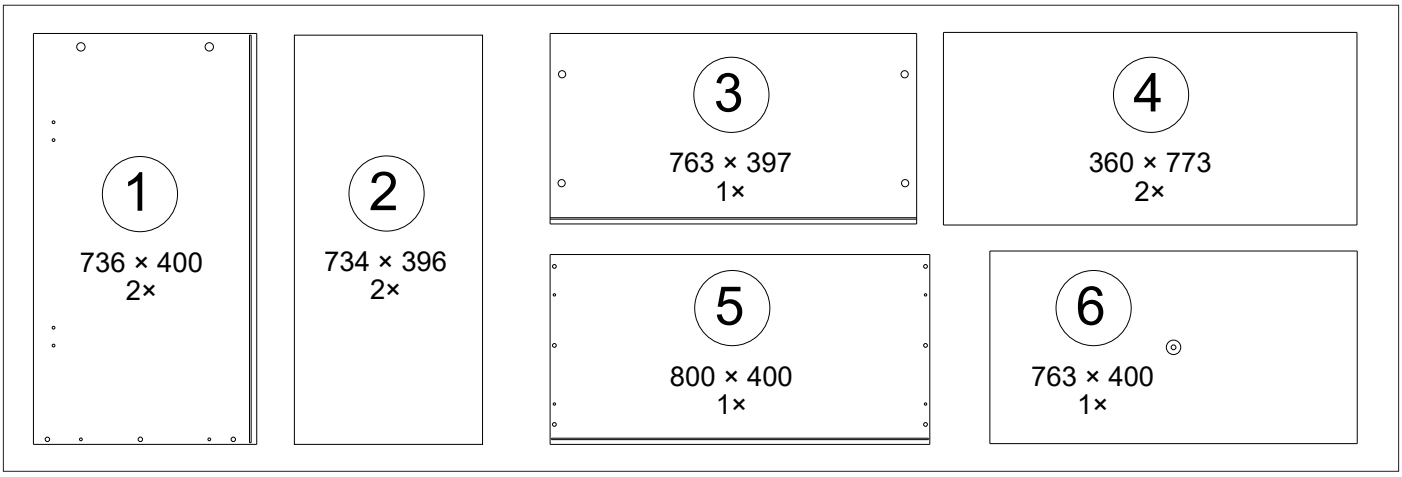

1

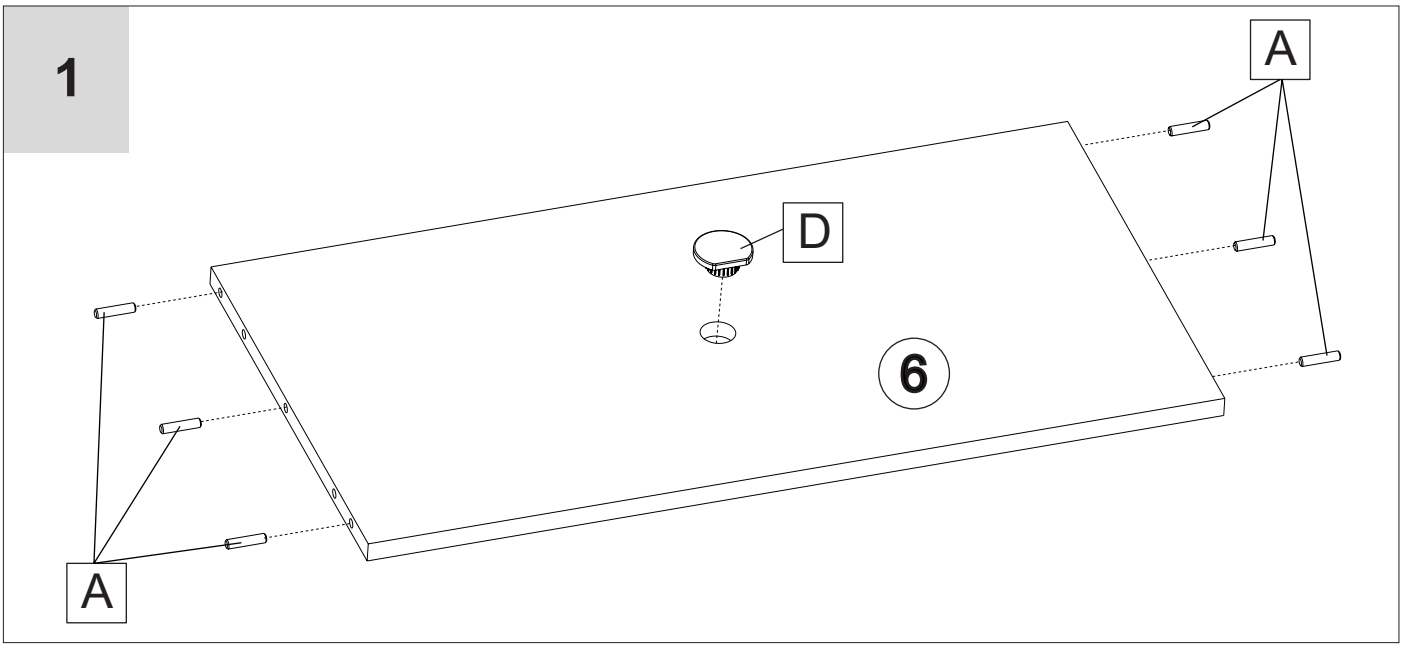

2

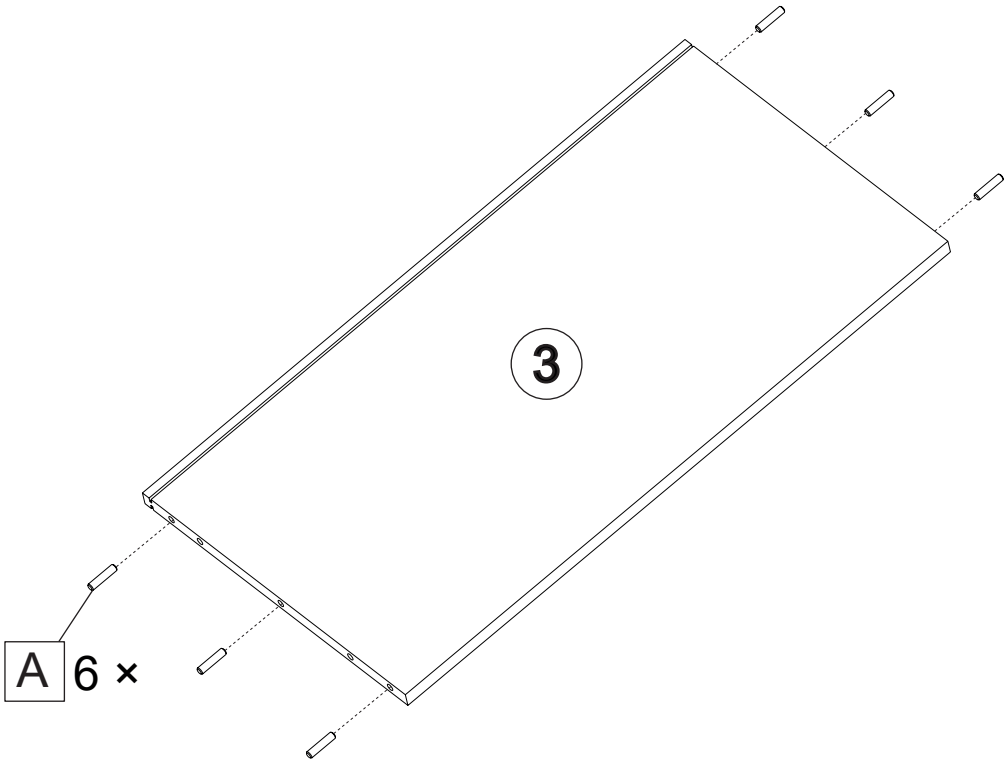

3

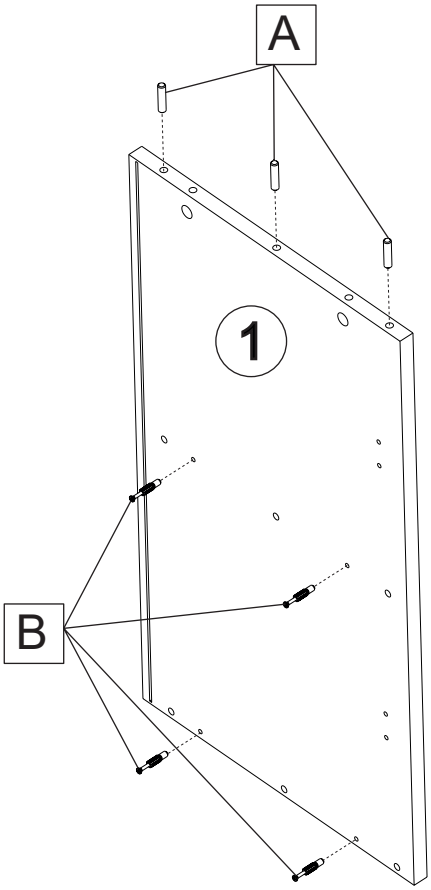

4

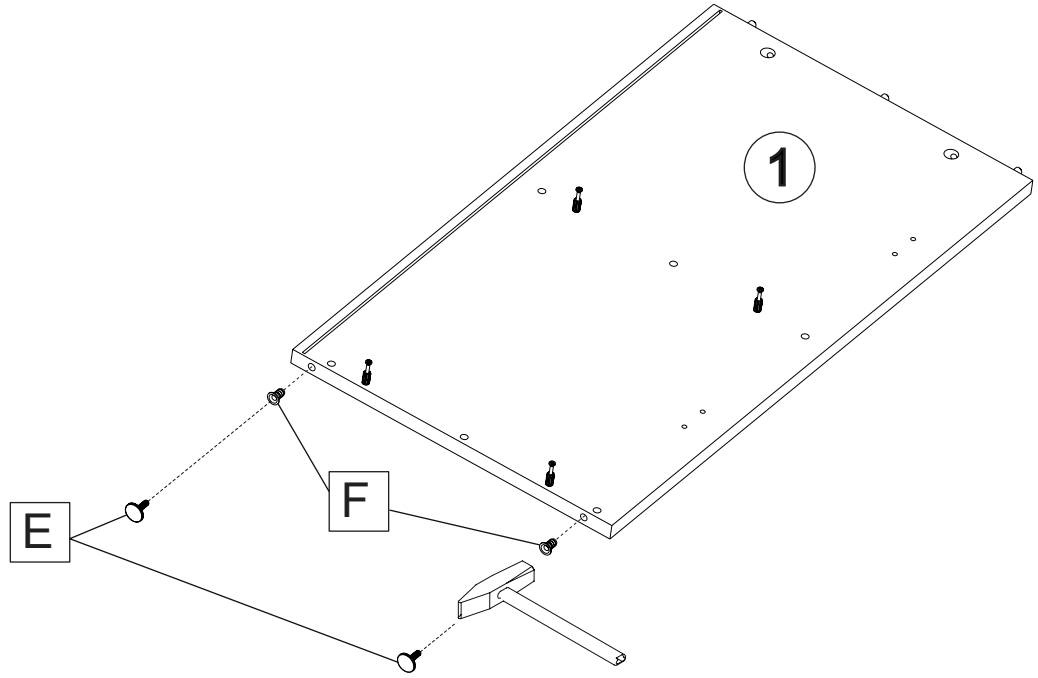

5

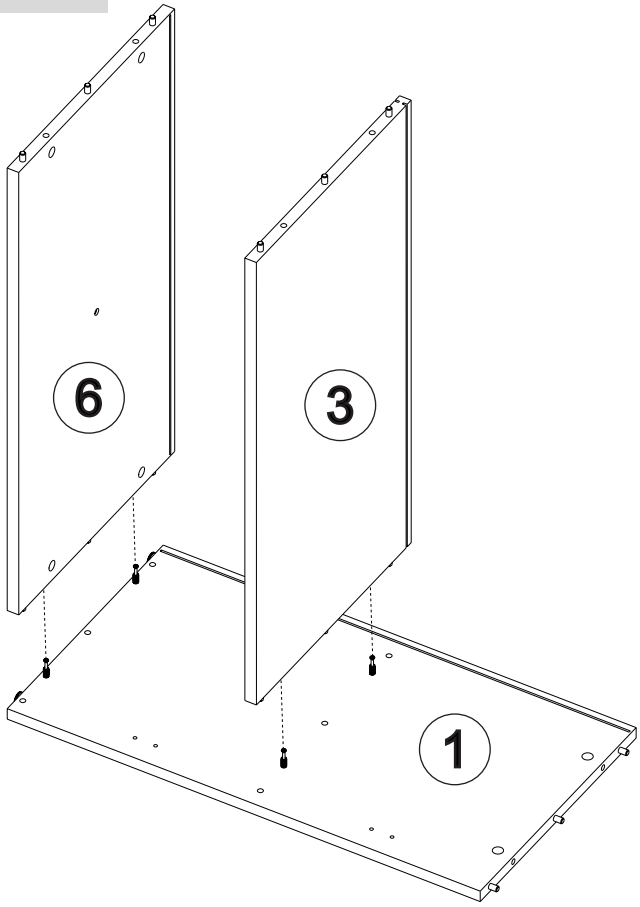

6

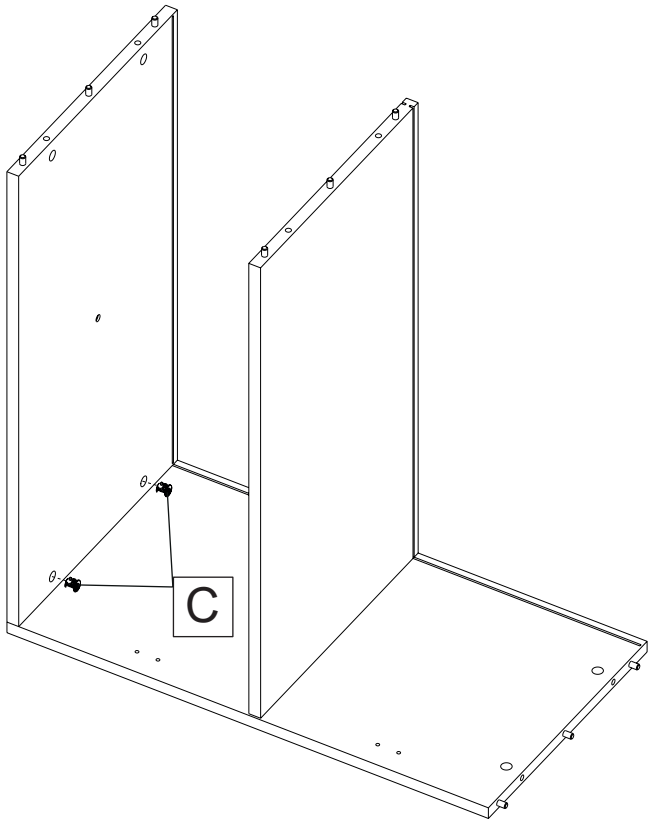

7

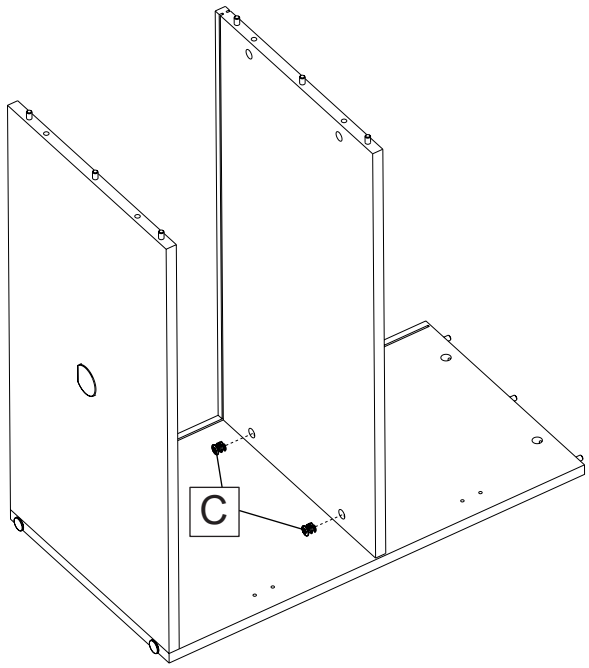

8

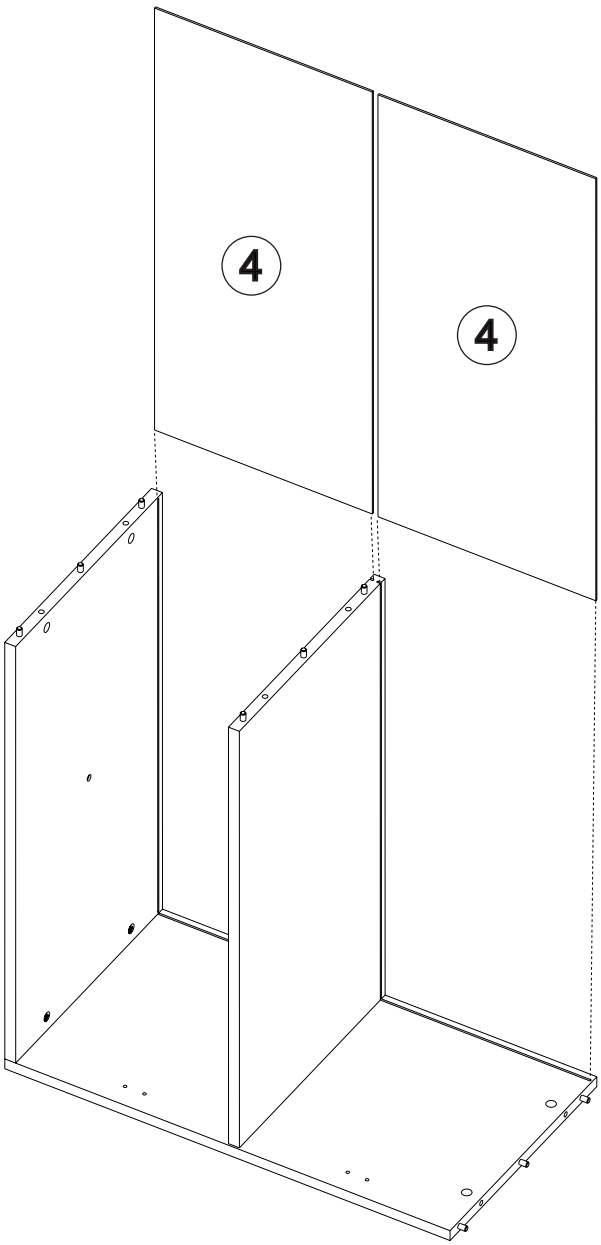

9

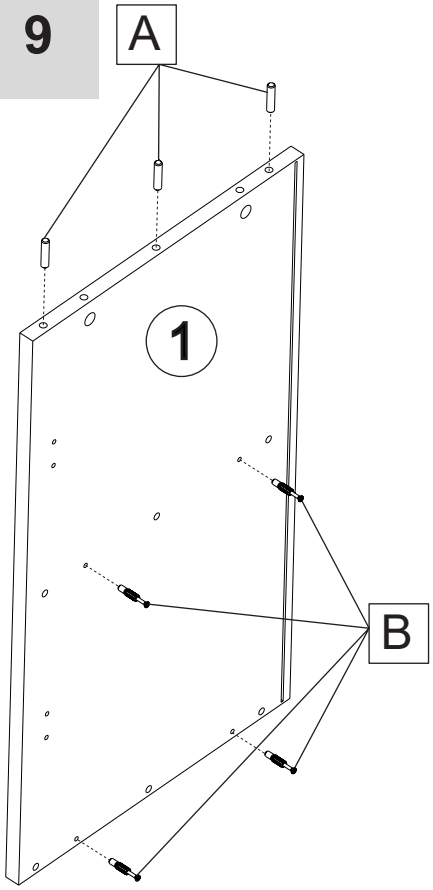

10

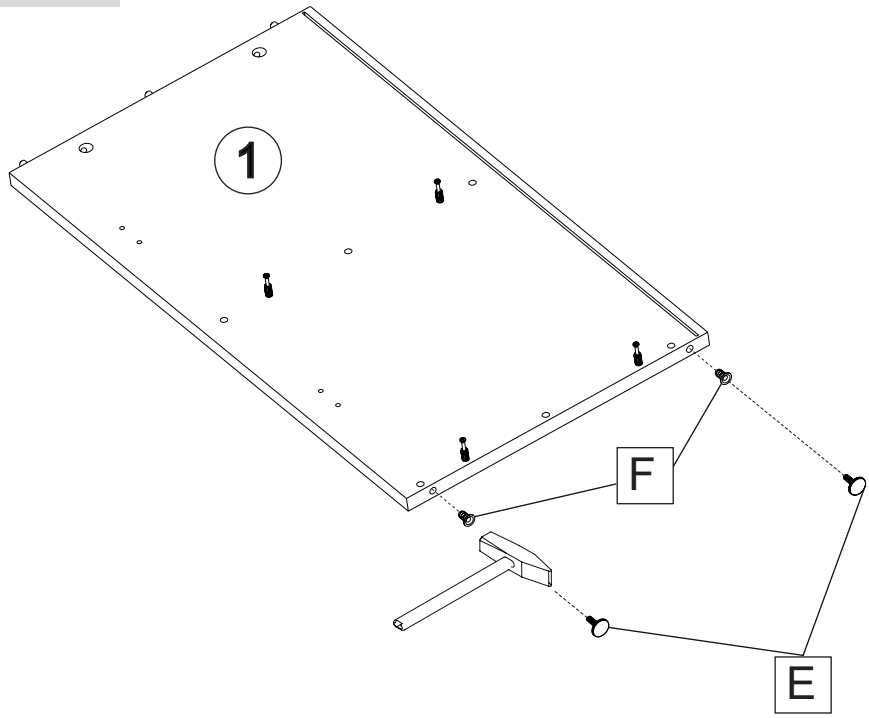

11

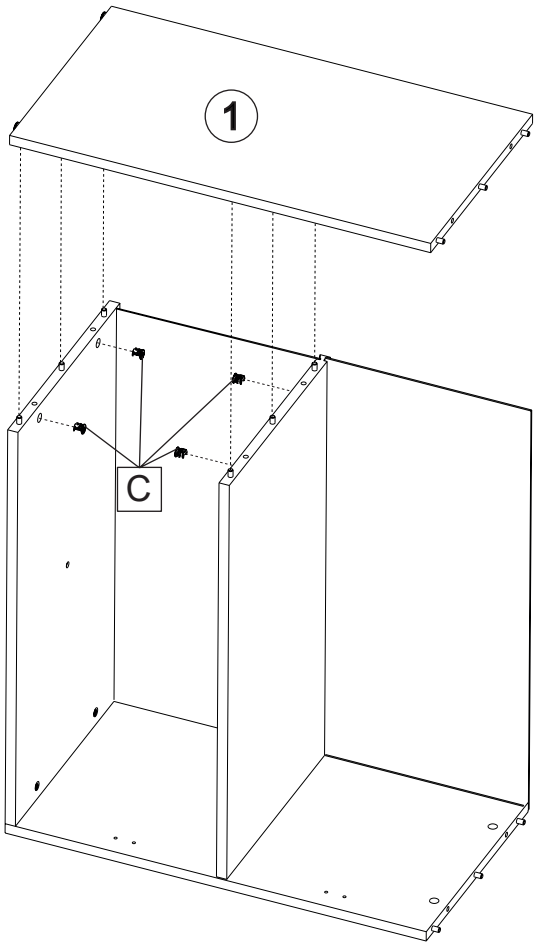

12

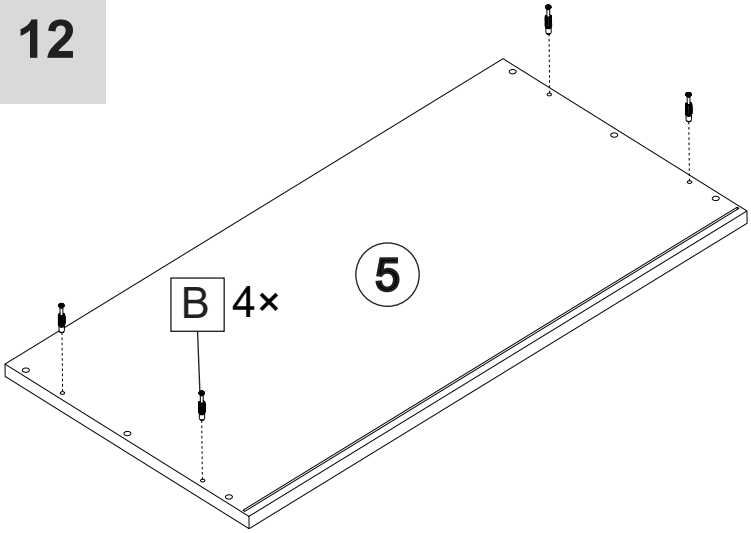

13

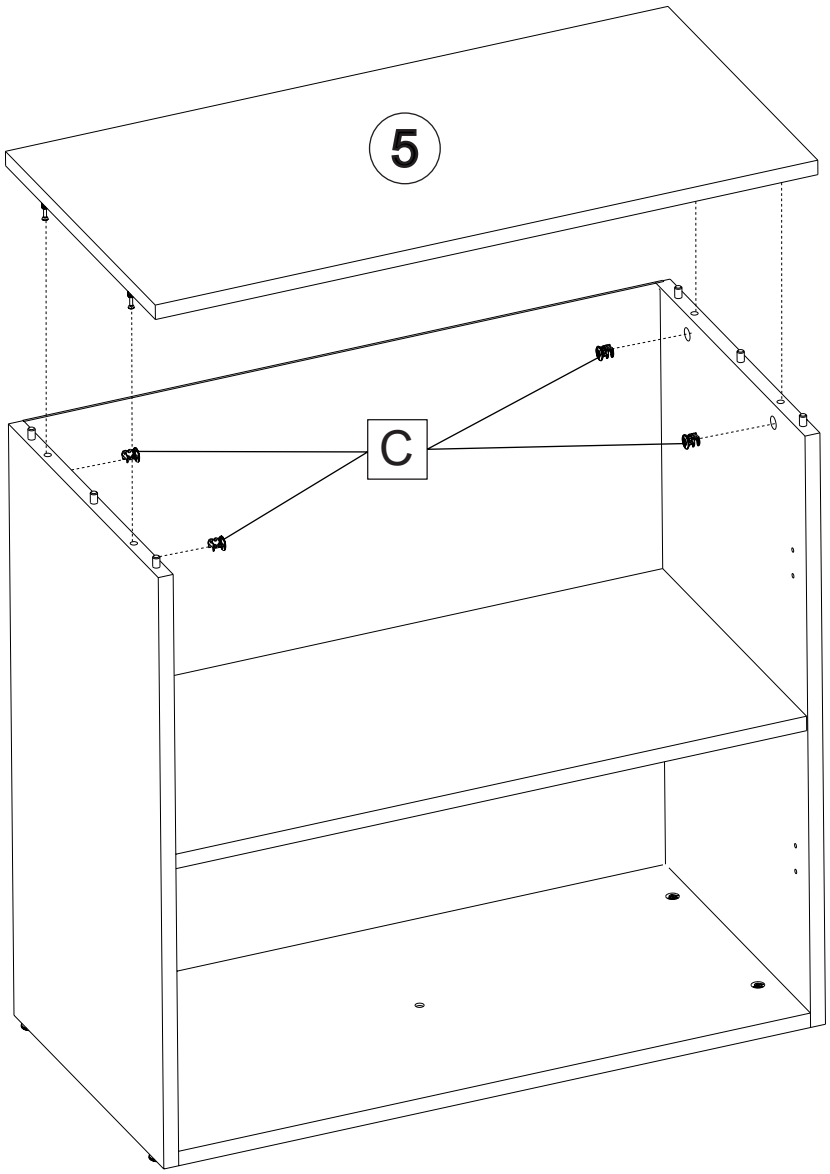

14

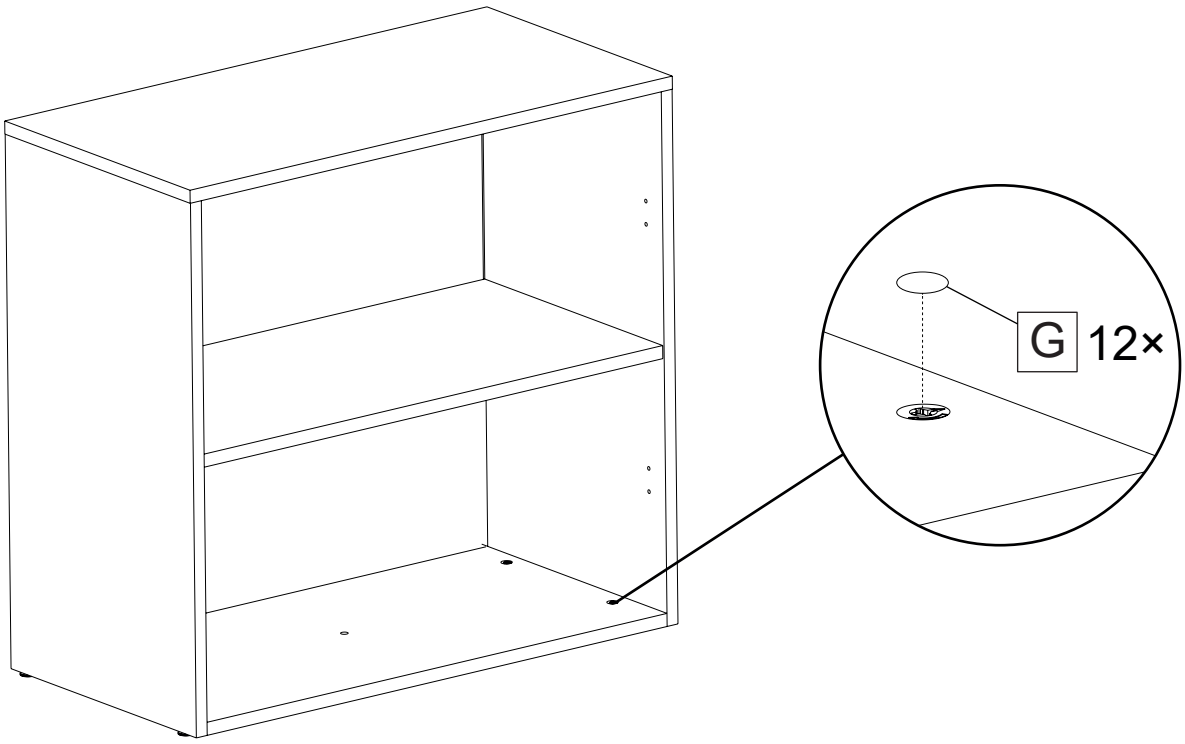

15

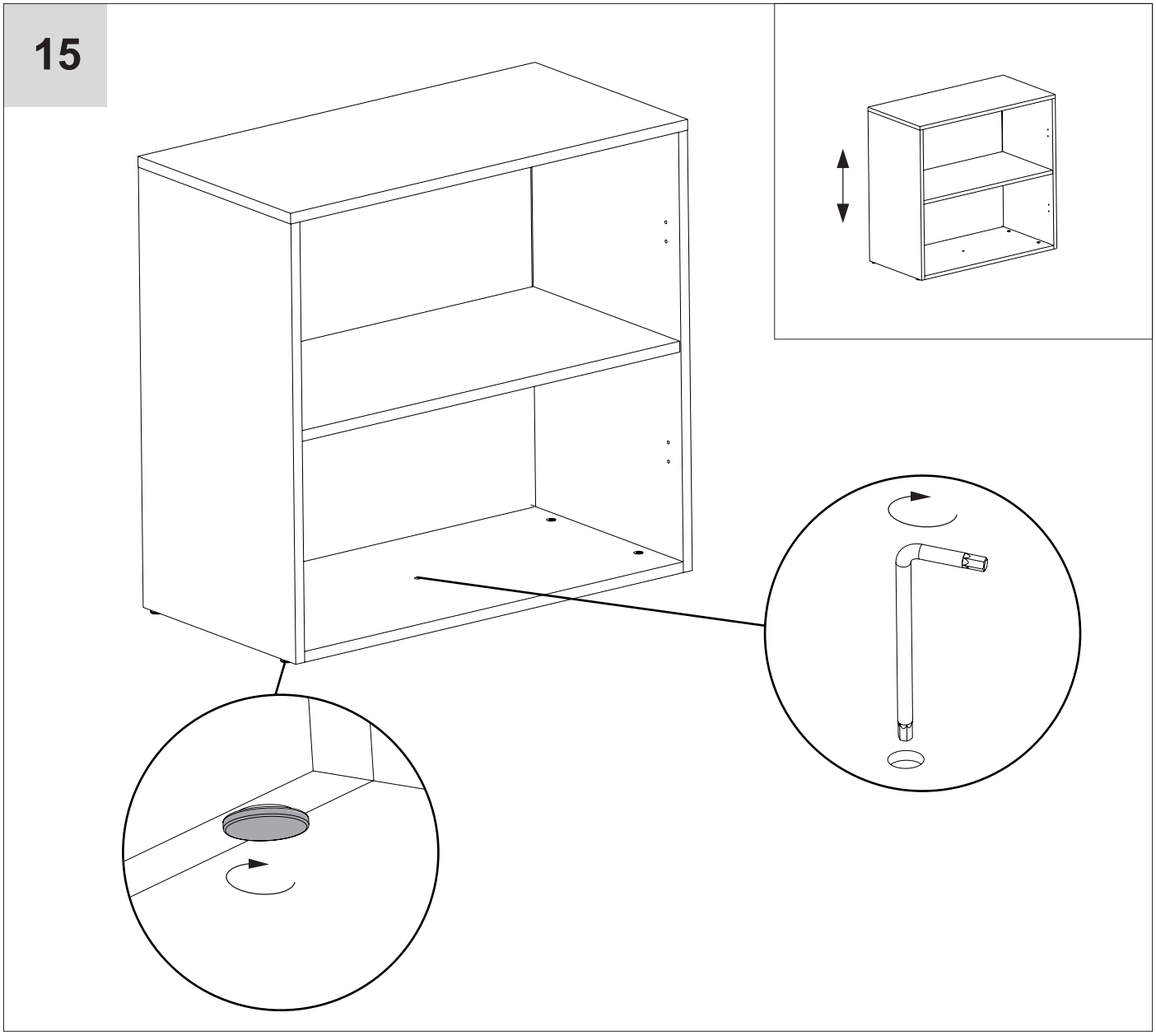

16

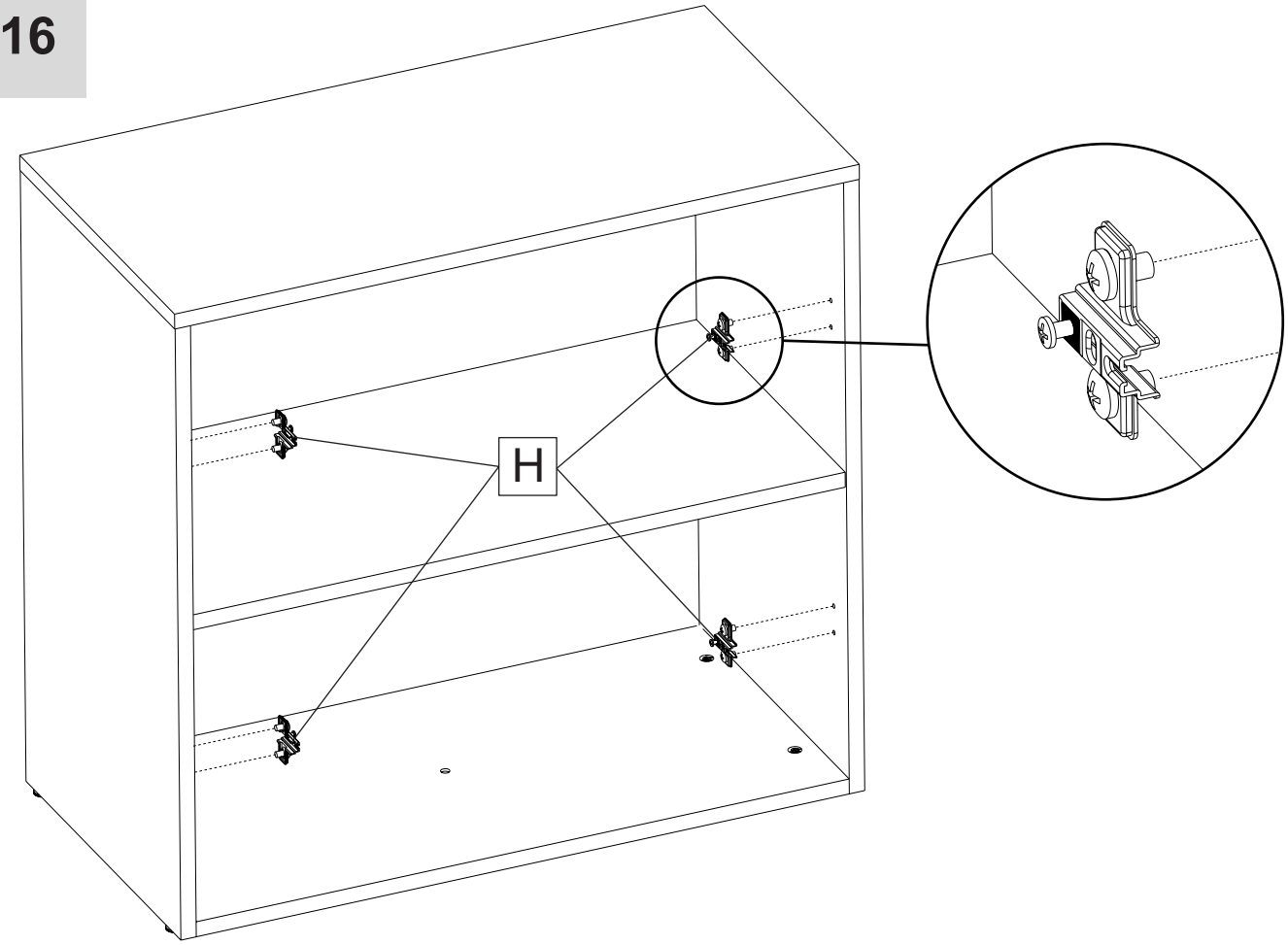

17

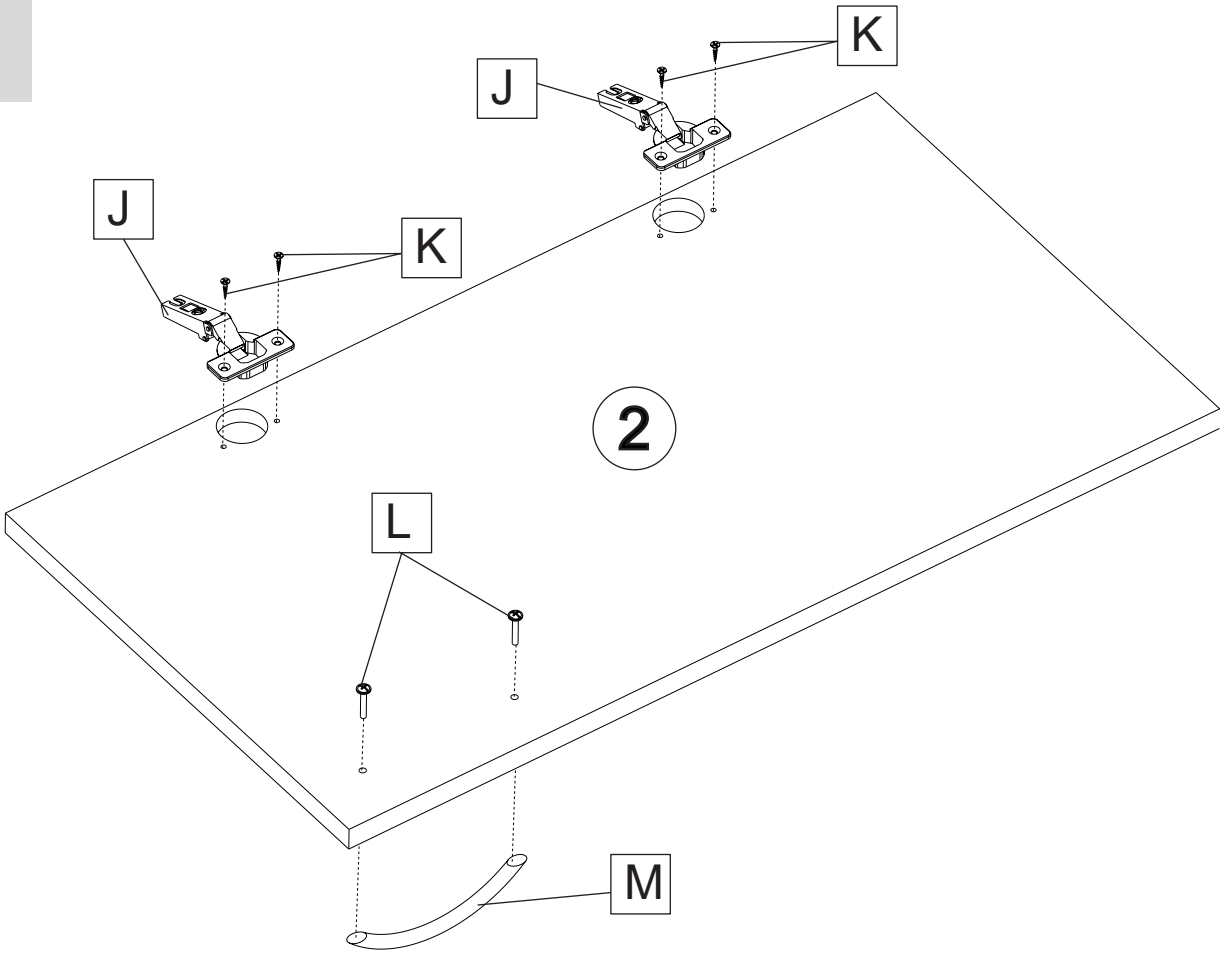

18

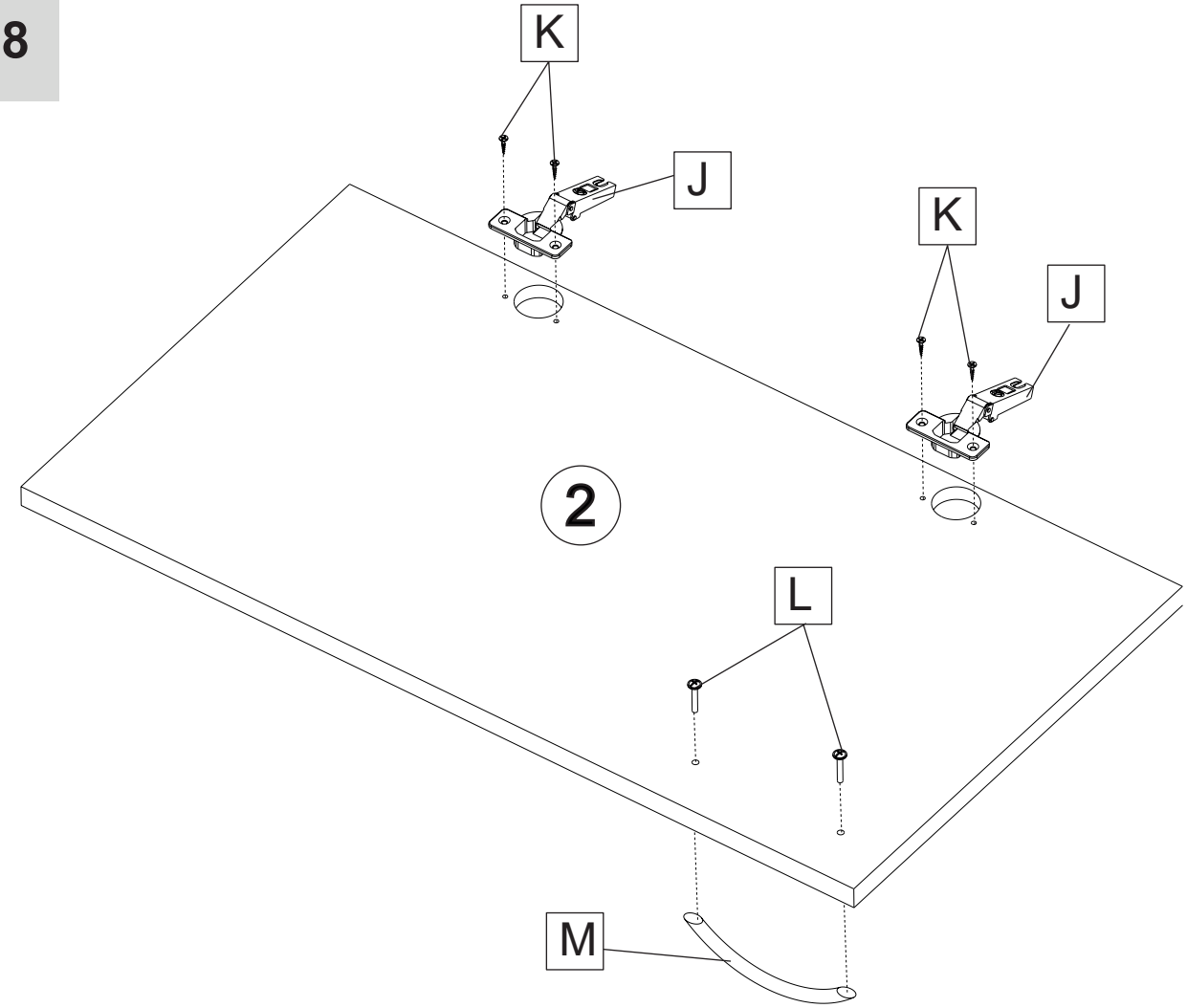
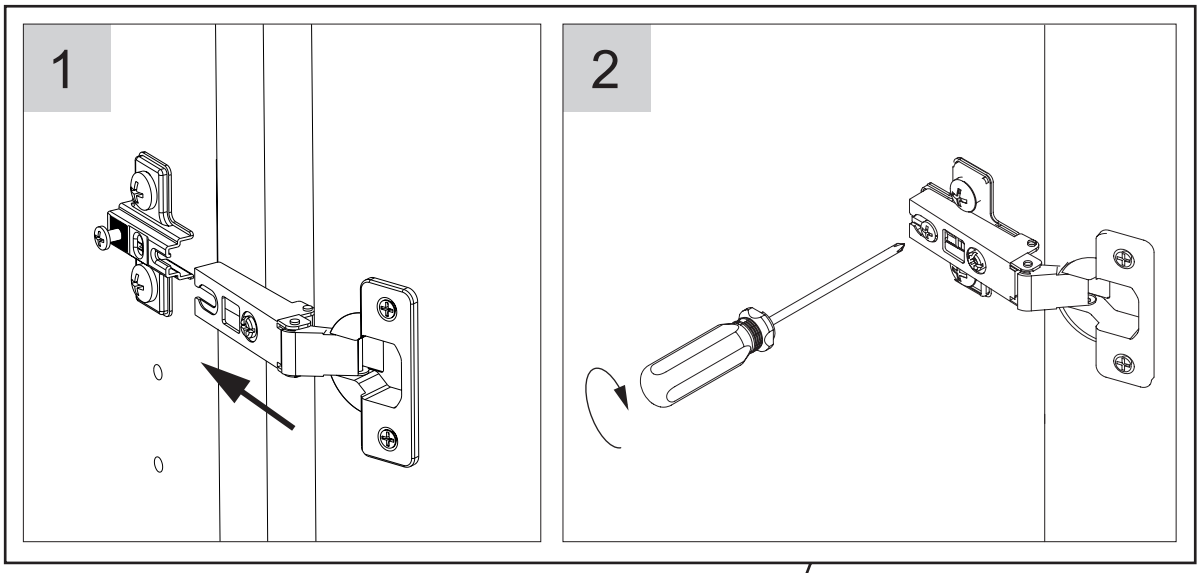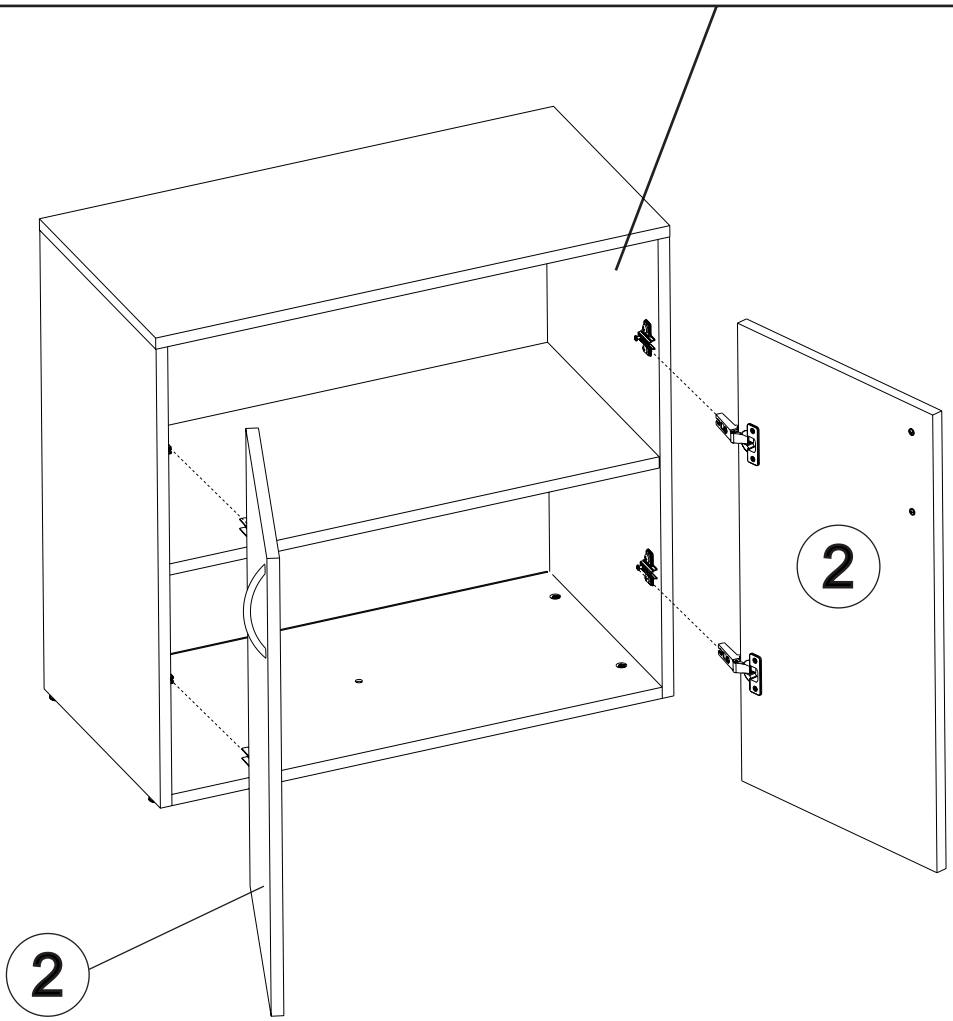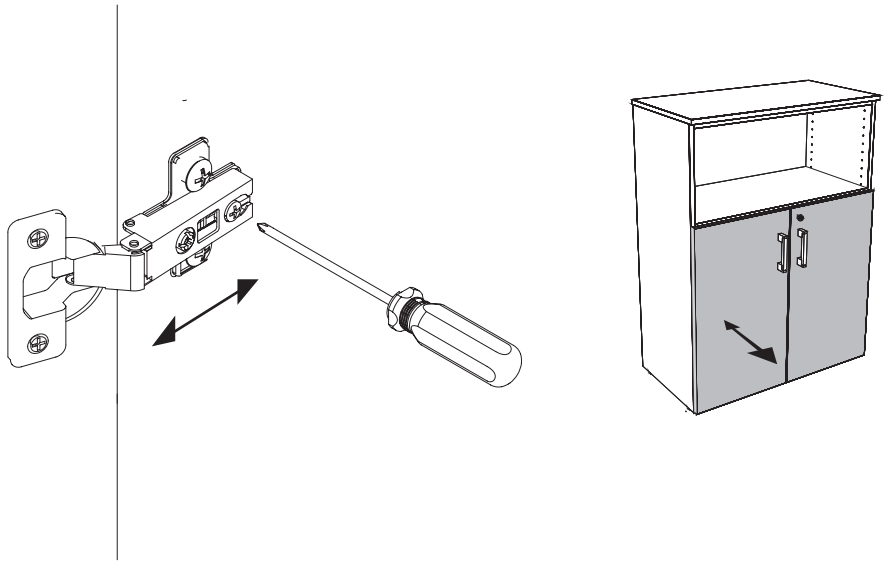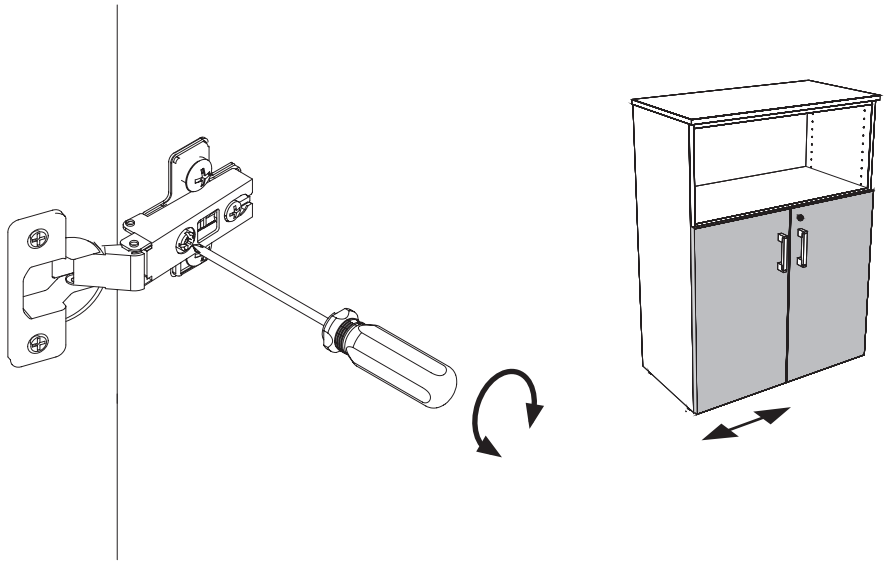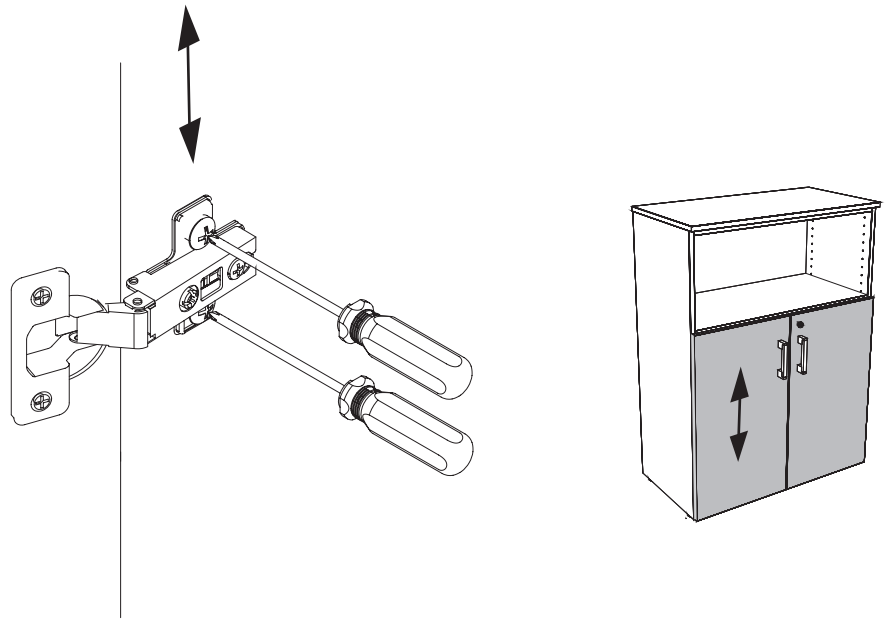
19