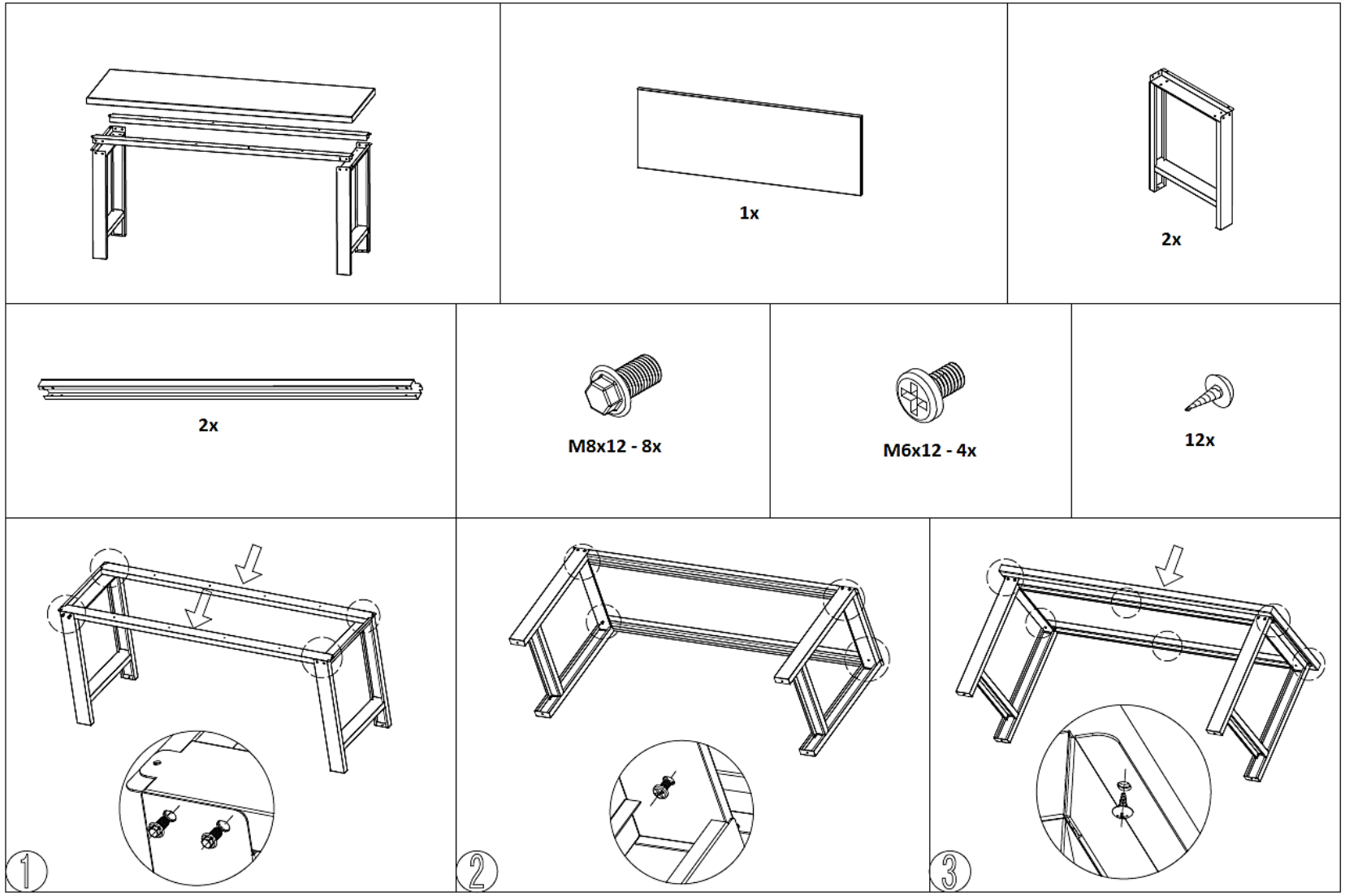469116 - 469118